KRYOTHERM
6 Aerodromnaya street, Saint-Petersburg, 197348 Russia
Tel: +7 812 394-13-10, fax: +7 812 394-12-67, E-mail: info@kryotherm.ru, http://www.kryotherm.ru

SPECIFICATION OF THERMOELECTRIC MODULE TB-127-1.4-1.5

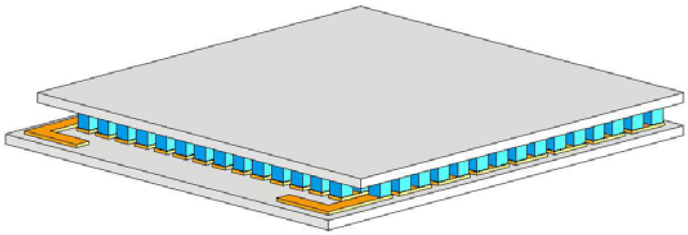

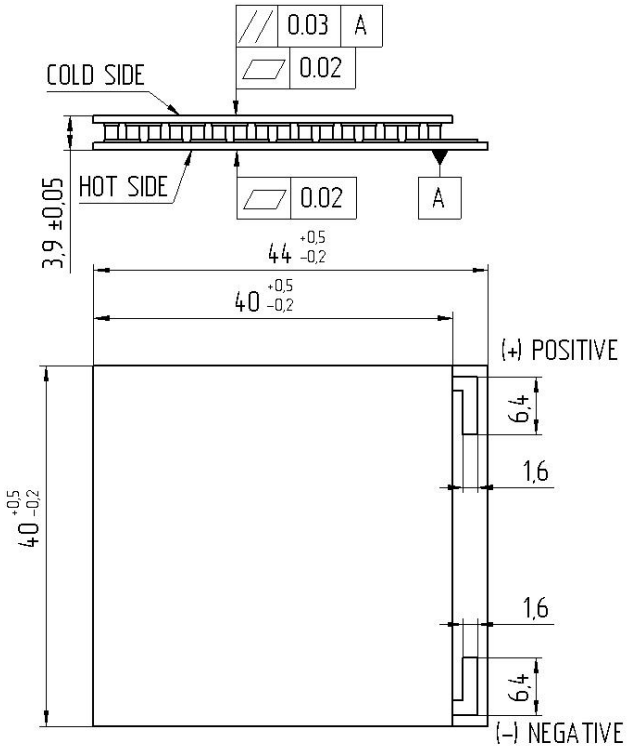

Thermoelectrical parameters	*Unit*	*Value*
Imax	**Amps**	**6.1**
Umax	**Volts**	**15.9**
ΔTmax	**K**	**70**
Qmax	**Watts**	**60**
R_{ac} *(at 295 K)*	**Ohm**	**2.05**
Tolerance	**%**	**±10**
All parameters except R_{ac} are given at Th=300 K		

Assembly parameters	*Unit*	*Value*
Wires	**HB-0.35 4 600**	
Cross section	**mm^2**	**0.35**
Metallization	**Not**	
Sealing	**Not**	
Internal solder	**°C**	**139**
Brazing solder	**°C**	**not**
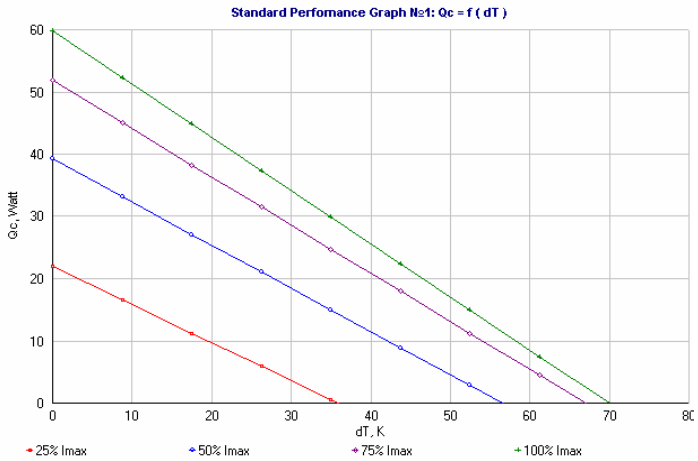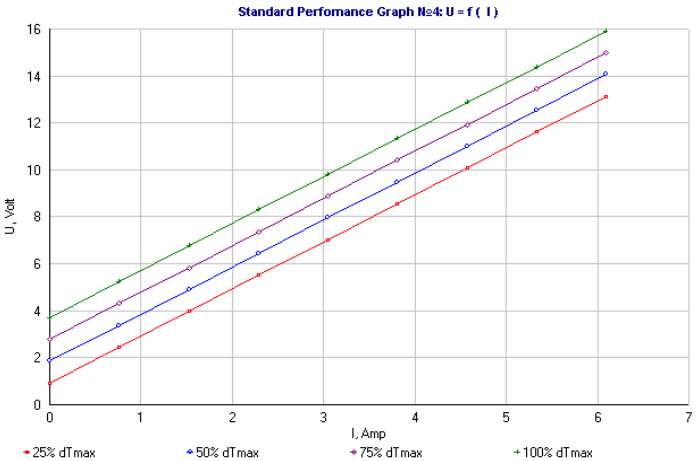
Operational parameters	*Unit*	*Value*
Working temperature range	**°C**	**-50 ÷ +80**
Max. processing temperature	**°C**	**130**
ROHS compliance		**YES**